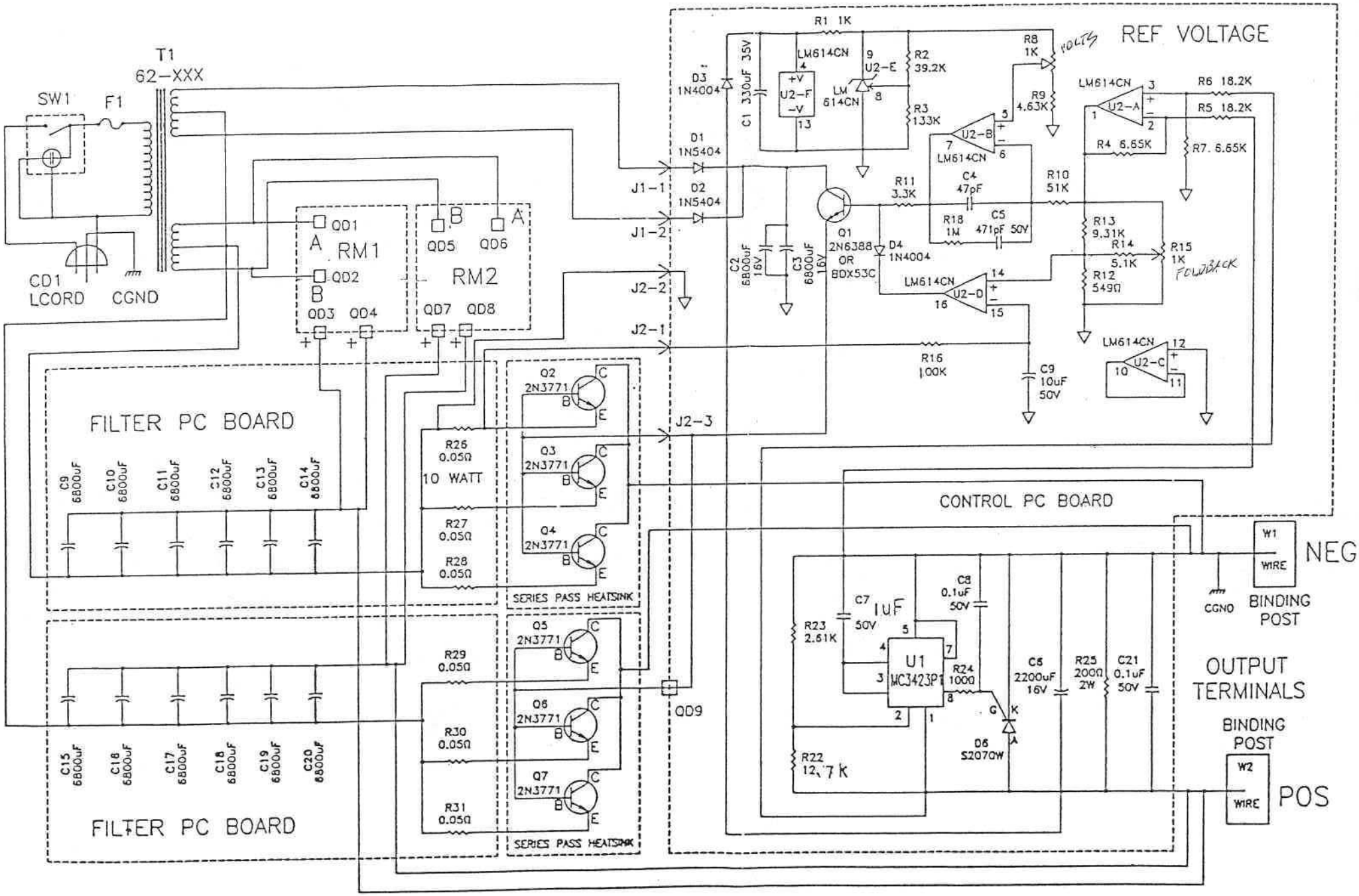

修正 REVISION	日期 DATE	說明 DESCRIPTION	核准 APPROVAL BY	繪圖 DRAWN BY	設計 DESIGNED BY	比例尺 SCALE		COMPLETE SCHEMATIC	YOUWON ENTERPRISES CO., LTD.
				校對 CHECKED BY	核准 APPROVED BY	日期 DATE	9,24,93		DWG NO: S-00-1 / MODEL NO: PR-60B